Atlas Copco Surface drill rigs

ROC® D7, D9 and D7LF

Technical specification



A true workhorse for the widest range of applications

- Unique, durable cylinder-operated feed system that makes the best use of the rock drill
- Long reach makes it ideal for use also in slope stabilization
- Supreme productivity thanks to the use of the proven COP-series of rock drills

ROC D7, D9 and D7LF (Long Feed) are intended for construction sites and aggregate quarries. The main components are:

- Track frames with single grouser pads and cleaning holes, hydraulic track oscillation and two speed traction
  - size FL 4HD (ROC D7)
  - size FL 6 (ROC D9)
- Caterpillar turbo charged diesel engine C 7
- Atlas Copco screw type compressor
- Operator's cabin, ROPS and FOPS approved
- Folding boom system
- Aluminum profile feed beam
- Hydraulic cylinder feed system
- Carousel type rod handling system
- Hydraulic rock drill
- Dust collection system

Hole range			
ROC D7 and D7LF	T38, T45, T51	64-115 mm	2 ½"- 4 ½"
ROC D9	T45, T51	76-115 mm	3"- 4 ½"
Hydraulic rod handling system for max hole depth, with 3,6 m (12') extension rods			
ROC D7	T38, T45	28 m	92'
ROC D7	T51	21 m	69'
ROC D9	T45, T51	28 m	92'
Hydraulic rod adding system for max hole depth, with 6,1 m + 4,2 m (20' + 14') extension rods			
ROC D7LF	T38, T45, T51	10 m	33'

Atlas Copco

Specifications

Engine

Caterpillar turbo charged, diesel engine, CAT C7, Tier III/stage 3
- Power rating at 2200 rpm ..... 168 kW 225 HP

Feed

Hydraulic cylinder feed with hose guide and double drill steel support with movable lower guide/dust hood
- Feed extension ..... 1 400 mm 4'7"
- Feed rate, max ..... 0.92 m/s 184 ft/min
- Feed force, max ..... 20 kN 4 400 lbf
- Tractive pull, max ..... 20 kN 4 400 lbf

ROC D7 and D9
- Total length ..... 7 140 mm 23'5"
- Travel length ..... 4 240 mm 14'

ROC D7LF
- Total length ..... 8 240 mm 27'7"
- Travel length ..... 5 670 mm 18'7"

Dust collector DCT 110D

- Filter area ..... 11 m^2 118 sq.ft
- Number of filter elements ..... 11 pcs
- Suction capacity at 500 mm wg ..... 560 l/s 1 200 cfm
- Suction hose diam ..... 127 mm 5"
- Cleaning air pressure, max ..... 7.5 bar 109 psi
- Cleaning air consumption ..... 2-4 l/pulse 0.06 - 0.12 cu.ft/pulse

Safety cabin

- ROPS and FOPS approved with rubber vibration dampers
- 2 x wipers with washer
- Clear laminated glass (front and roof windows)
- Clear toughened glass (side and rear windows)
- Fully adjustable operator's seat
- Adjustable foot rest
- Cabin light
- Rig inclination indicator
- Rear view mirror
- Fire extinguisher, 6 kg (13 lbs) dry chemical type ABE class III type
- Outlet socket, 24 V
- Prepared with speakers for CD-radio
- Combined front mounted platform/tool box
- Electric combined engine/inclination/hole depth instrument

Air conditioner

- Refrigerant R134a
- Cooling capacity ..... 5,5 kW
- Fan suction capacity ..... 125 l/s 265 cfm

Compressor

Atlas Copco OIS K-27-C106 GD, screw compressor

ROC D7 and D7LF
- Working pressure, max ..... 10.5 bar 152 psi
- FAD, at normal working pressure ..... 105 l/s 223 cfm
  Alternatively ..... 127 l/s 270 cfm

ROC D9
- Working pressure, max ..... 10.5 bar 152 psi
- FAD, at normal working pressure ..... 136 l/s 288 cfm

Hydraulic system

- Anti-jamming
- Automatic feed force control RPC-F
- Damper pressure control - impact DPC-I

Hydraulic oil cooler
- Max ambient temperature ..... 50°C 122°F

Pumps
- Axial piston pump (1) ..... 150 l/min 39.6 US gal/min
- Gear pump (2) ..... 80 l/min 21.1 US gal/min
- Gear pump (3) ..... 40 l/min 10.6 US gal/min
- Gear pump (4) ..... 40 l/min 10.6 US gal/min

Return and drainage filters
- Filtration rate ..... 16 µm absolute

Electrical system

- Voltage ..... 24 V
- Batteries ..... 2 x 12 V, 185 Ah
- Alternator ..... 28 V, 95 Ah
- Work lights, front ..... 4 x 70 W
- Work lights, rear ..... 2 x 70 W
- Work lights, feed ..... 2 x 70 W
- Warning lamp and reverse buzzer

Volumes

- Hydraulic oil tank ..... 250 l 65 US gal
- Hydraulic system, total ..... 300 l 79 US gal
- Compressor oil ..... 24 l 6.3 US gal
- Diesel engine oil ..... 28 l 7.4 US gal
- Diesel engine, cooling water ..... 35 l 9.2 US gal
- Diesel engine, fuel tank ..... 370 l 98 US gal
- Traction gear ..... 3 l 0.8 US gal
- Lubrication tank (ECL) ..... 10 l 2.6 US gal

Hydraulic rock drill

Rock drill	Drill rig	Impact power		Hydraulic pressure, max		Impact rate	Torque, max		Weight approx	
COP 1840	ROC D7 and D7 LF	20 kW	26.8 hp	230 bar	3 335 psi	42-50 Hz	1180 Nm	870 lbf/ft	175 kg	385 lb
COP 1840 EX									230 kg	507 lb
COP 2560	ROC D9	25 kW	33.5 hp	230 bar	3 190 psi	44 Hz	1 810 Nm	1 335 lbf/ft	187 kg	412 lb
COP 2560 EX									249 kg	549 lb

Transport dimensions

Hight and lenght			
Feed dumped 1			
ROC D7, D9	Height (H1)	3 200 mm	10′ 6″
ROC D7, D9	Length (L1)	11 000 mm	36′
ROC D7LF	Height (H1)	3 200 mm	10′ 6″
ROC D7 LF	Length (L1)	11 970 mm	38′ 8″
Feed dumped 2			
ROC D7	Height (H2)	3 500 mm	11′ 6″
ROC D7	Length (L2)	10 900 mm	35′ 9″

Feed dumped 1

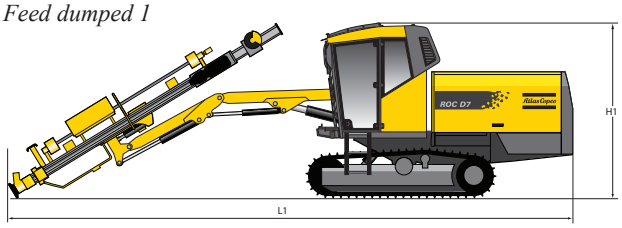

Feed dumped 2

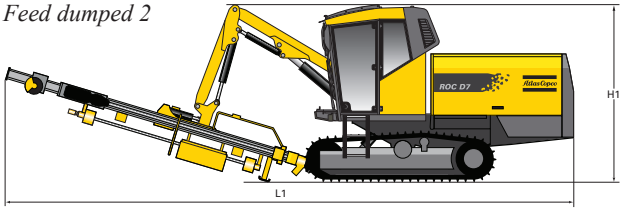

Dimensions and weight

Feed Height (H1)		
ROC D7,D9	7 140 mm	23′ 5″
ROC D7LF	8 240 mm	27′

Weight		
Standard unit excluding all options and drill steel		
ROC D7	14 500 kg	32 000 lb
ROC D9	15 100 kg	33 290 lb
ROC D7 LF	14 200 kg	31 305 lb

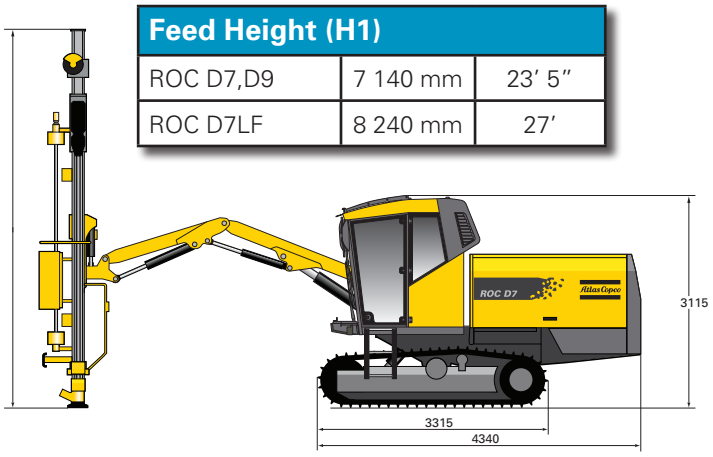

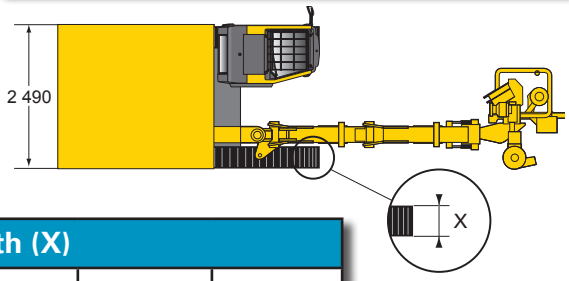

Track shoe width (X)		
ROC D7 with FL 4 HD	305 mm	1′
ROC D9 with FL 6	330 mm	1′ 1″

Selection of optional equipment

Carrier
- Track chains with triple grouser pads (FL 4 HD)
- FL 6 track frames (ROC D7)
- Hydraulic support leg
- Hydraulic winch with towing eye and wire guides,remote controlled
- Diesel engine preheater
- Air flow switch
- High/low air flushing system
- Electric refuelling pump
- Service hand lights inside canopy, 2 pcs
- Xenon work lights, 2 pcs on top of cab pointing forward and 2 pcs on top of cab pointing to the rear
- Combined warning sound and warning light
- ProCom satellite based drill rig monitoring system (only in combination with a written service agreement)

Safety cabin
- Clear laminated glass (front and roof windows)
- Tinted toughened glass (side and rear windows)
- Wiper for right hand side window
- Sun shade kit (rear side and rear windows)
- Cab heating
- Electric heated operator's seat
- Radio/CD

Feed
- Toe hole drilling kit (not for LF version)
- Silencing kit (not for LF version)
- Sleeve retainer for RHS 51
- Jaw set for R32/T38
- Jaw set for T45/T51
- TAC guide tube guides for drill steel support
- TAC 45 mm for 45 mm guide tube
- TAC 56 mm for 56 mm guide tube
- TAC 64 mm for 64 mm guide tube
- TAC 76 mm for 76 mm guide tube

Hole measuring systems
- Laser receiver upgrading kit
- Mechanical hole inclination instrument, ROC-Angie
- GPS compass for parallel holes

Lube oil, lube system and water mist system
- Rock drill oil collecting system (standard on D9)
- Central lubrication system, type Lincoln
- Thread greasing devise ECG (with oil)
- Thread greasing device, brush type (with grease)
- Artic hydraulic oil, VG 32
- Tropical hydraulic oil, VG 68
- Biological hydraulic oil, VG 46
- Water mist system, 120 l water tank
- Water mist system, excluding tank

Dust control
- Dust pre-separator (standard on D9)
- Rubber disc for DCT
- Rubber skirt for DCT

Delivered equipment, not mounted
- Gas charging equipment for rock drill
- First 50 hours service kit for compressor
- Conversion kit R38/T38 (not for D9)
- Conversion kit T45
- Conversion kit T51

Coverage areas

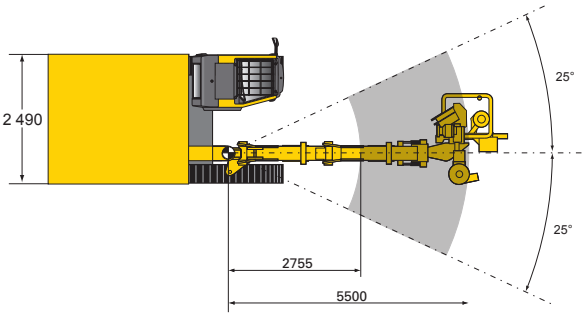

Horizontal reach (mm)

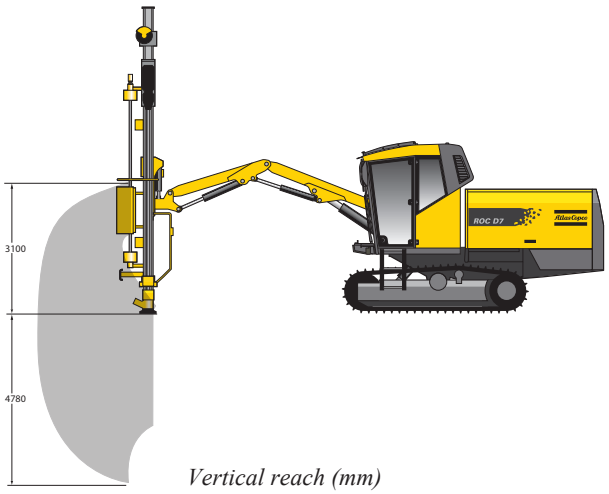

Vertical reach (mm)

Feed swing angles

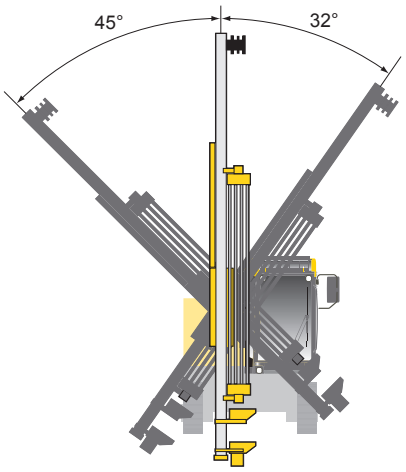

Feed without toe-hole kit

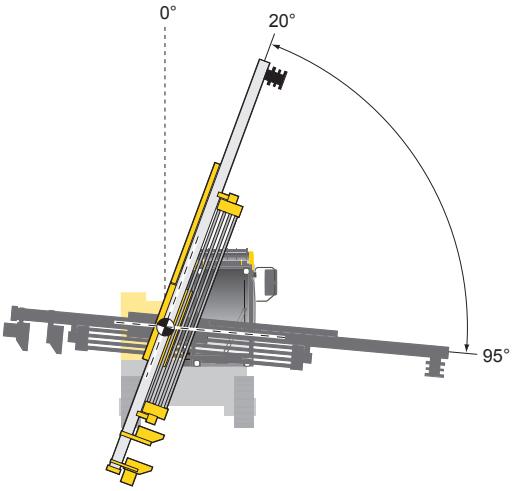

Feed without toe-hole kit but after reconnection for horizontal feed

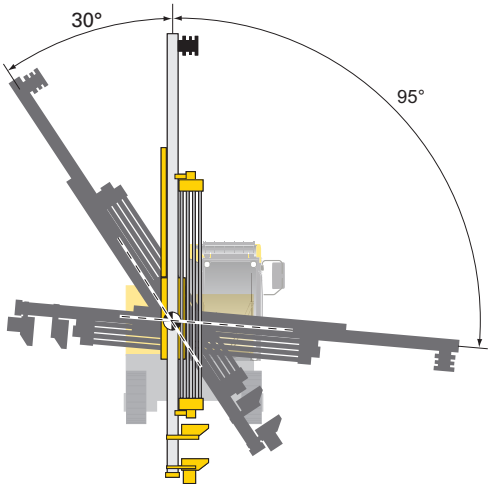

Feed with toe-hole kit (optional)

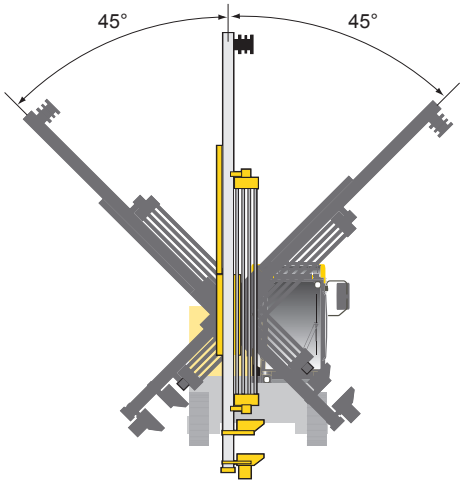

ROC D7LF